Efficient Scheduling to Minimize Calibrations

Michael Bender (Stony Brook U., Tokutek)
David Bunde (Knox College)
Vitus Leung (Sandia National Laboratories)
Samuel McCauley (Stony Brook U.)
Cynthia A. Phillips (Sandia National Laboratories)

Sandia National Laboratories is a multi-program laboratory managed and operated by Sandia Corporation, a wholly owned subsidiary of Lockheed Martin Corporation, for the U.S. Department of Energy's National Nuclear Security Administration under contract DE-AC04-94AL85000.

Integrated Stockpile Evaluation (ISE)

- Monitor nuclear weapons stockpile for any unforeseen problems
- Check some number of weapons each year
- Uses equipment that require calibrations
  - Verify correct measurements (like adjusting a scale)
- Calibrations don't take long, but are expensive
- Calibrations last for a specific amount of time, regardless of use

Goal: Minimize the number of calibrations

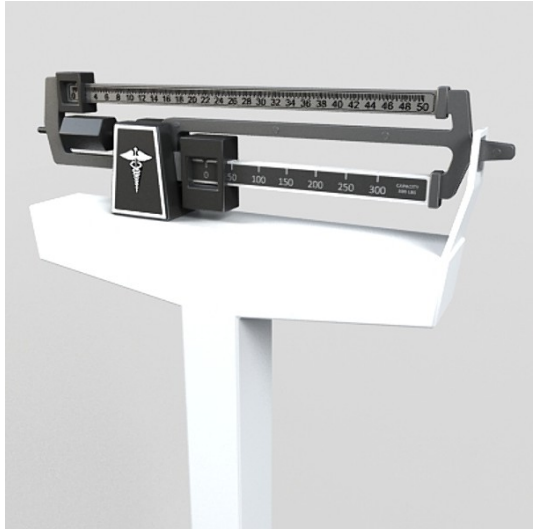

http://goingforwardblog.wordpress.com/2013/11/04/the-sticking-point/

The ISE Problem

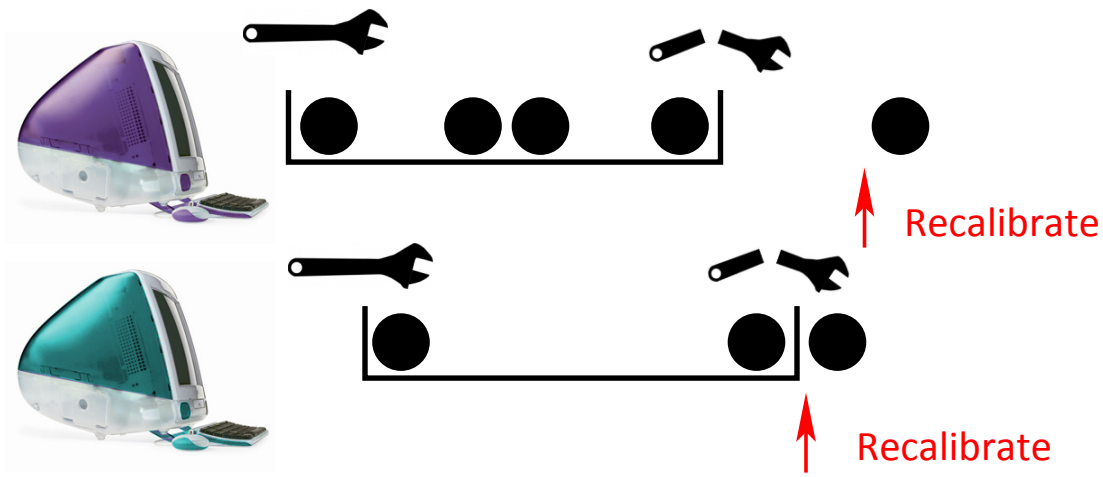

- N unit-length jobs with release dates and deadlines.
- P identical machines
- A machine can only run a job if it has been calibrated in the last T time steps (interval of length T)
- Objective: minimize number of calibrations
  - Calibration takes no time

Results

- Optimal algorithm for one machine
- If there is a feasible one-machine schedule, it is optimal
  - More machines cannot help in this case
- 2-approximation for multiple machines
  - Not known to be NP-hard for unit-sized jobs
  - Weakly NP-hard for jobs with non-unit length
- Some structural information for optimal schedules

Earliest-Deadline First

- For P machines, unit-sized jobs with release dates and deadlines, EDF finds a feasible schedule if one exists

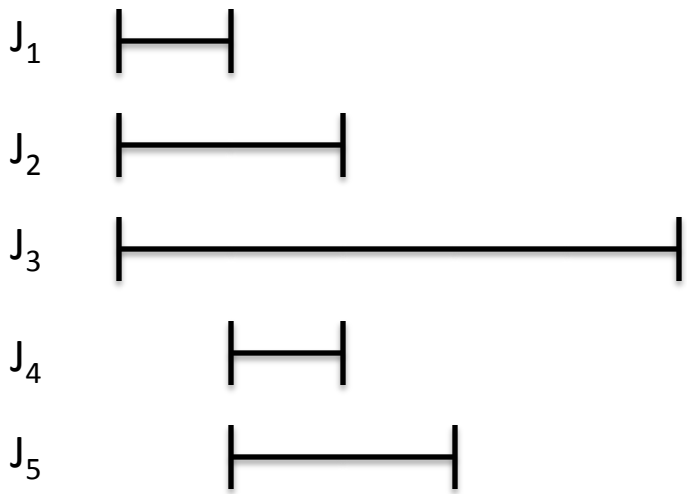

J_1	J_4	J_3
J_2	J_5	

Scheduling Into Intervals

- Given a set of legal (calibrated) intervals
- EDF still finds a feasible schedule respecting intervals, if possible
  - Create dummy jobs to fill all forbidden times
  - Can always swap jobs scheduled at the same time to get this structure

One-Machine Algorithm Overview

- Lay down intervals incrementally
- Do not allow jobs between intervals
- Test incremental feasibility with EDF

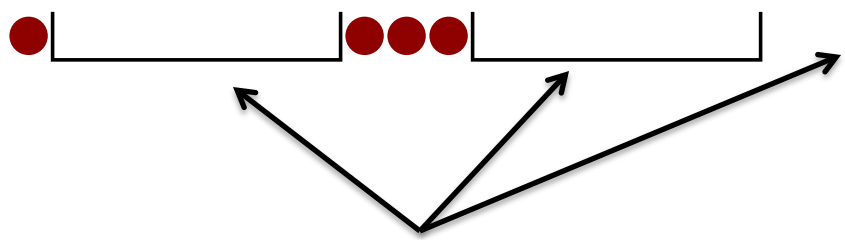

Jobs can go here

Interesting Property

- It may be useful to delay a job when it's possible to run it.
  - Not true for most objectives such as min makespan or min average completion time.
- A push moves an interval one time unit later.
- Idea: Push intervals as late as possible.

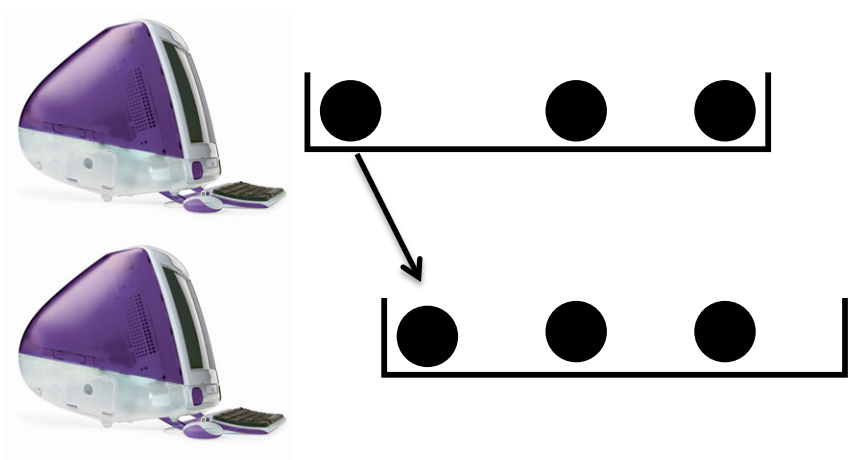

How Late is the Latest Possible?

- Push until any further would be infeasible (EDF test)
- Feasible push: current restrictions are feasible

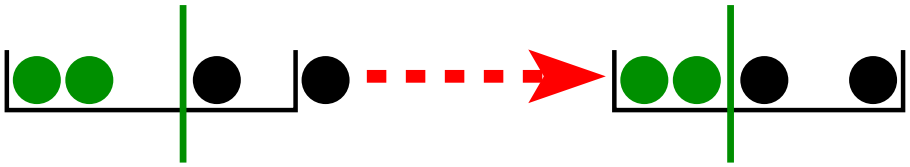

- Infeasible push: Some job misses a deadline

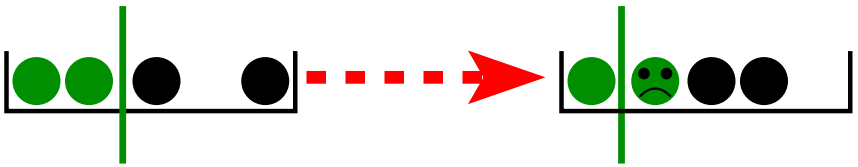

Lazy Binning Algorithm

While jobs are not all scheduled

Put down an interval immediately adjacent to the last interval

Or at t=0 if there are no intervals

Do all feasible pushes

- Proof of correctness by examining first deviation from optimal

Example with T=3:

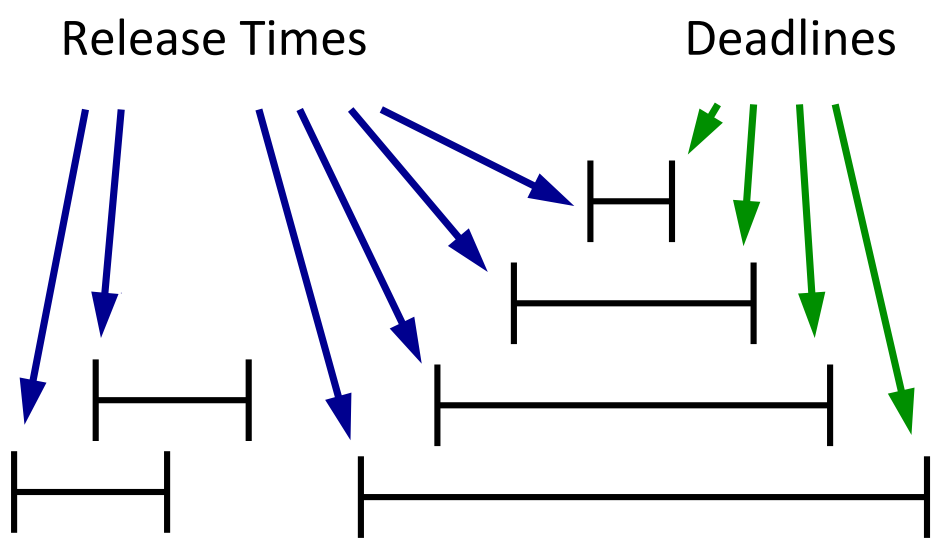

Lazy Binning Example

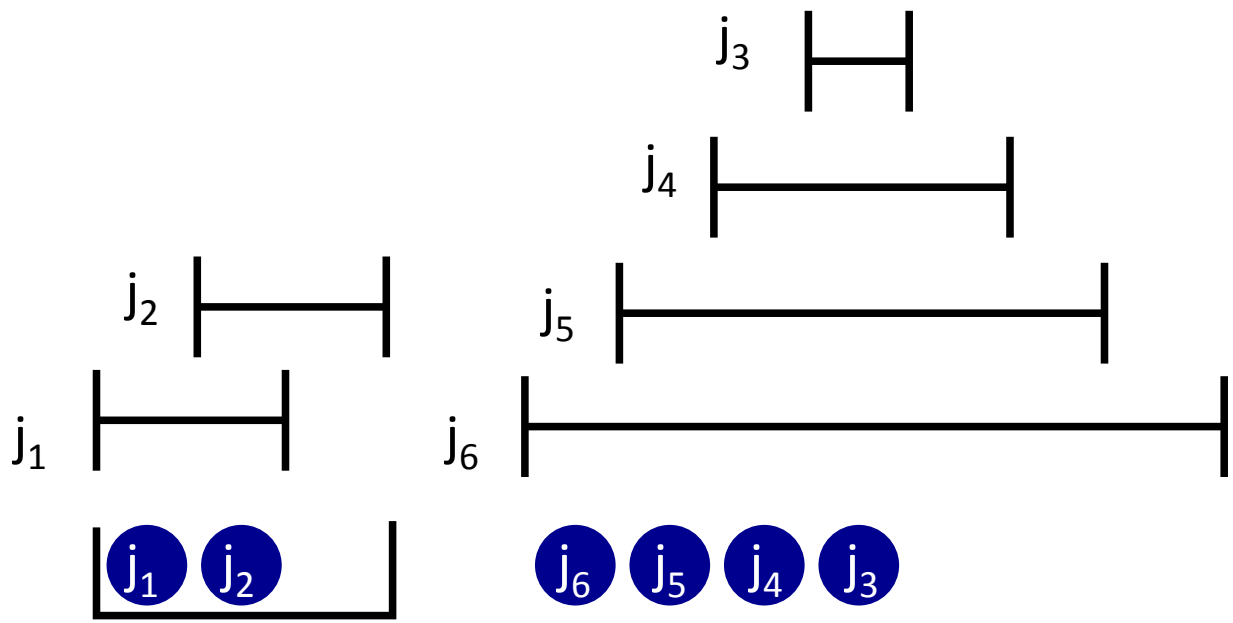

Lazy Binning Example

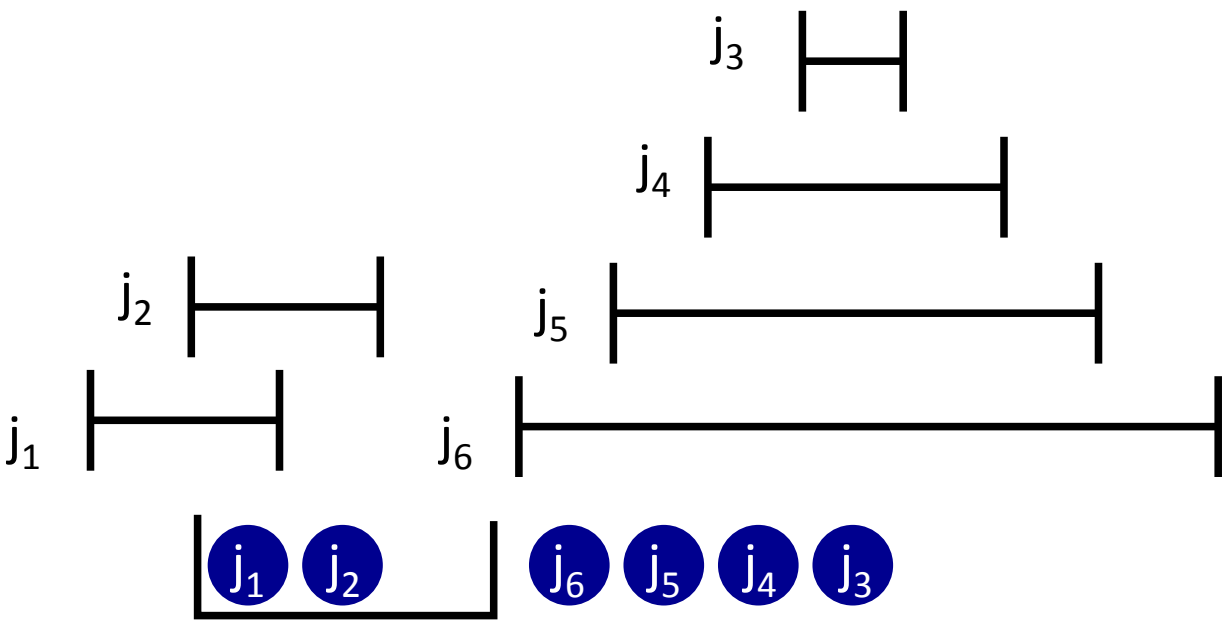

Lazy Binning Example

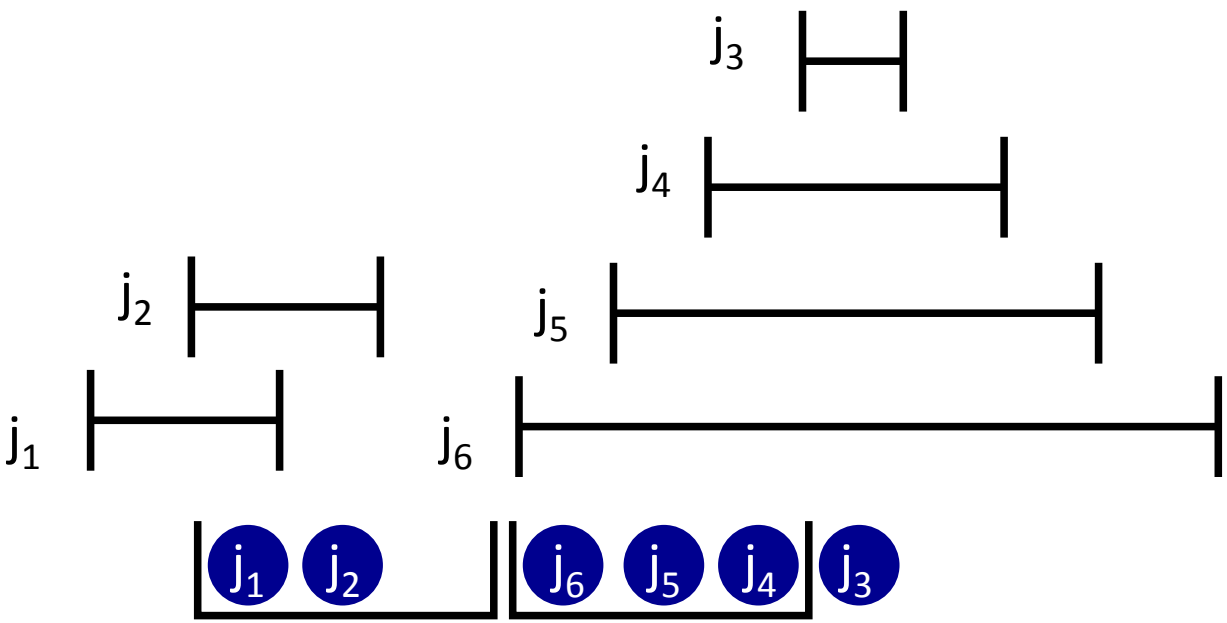

Lazy Binning Example

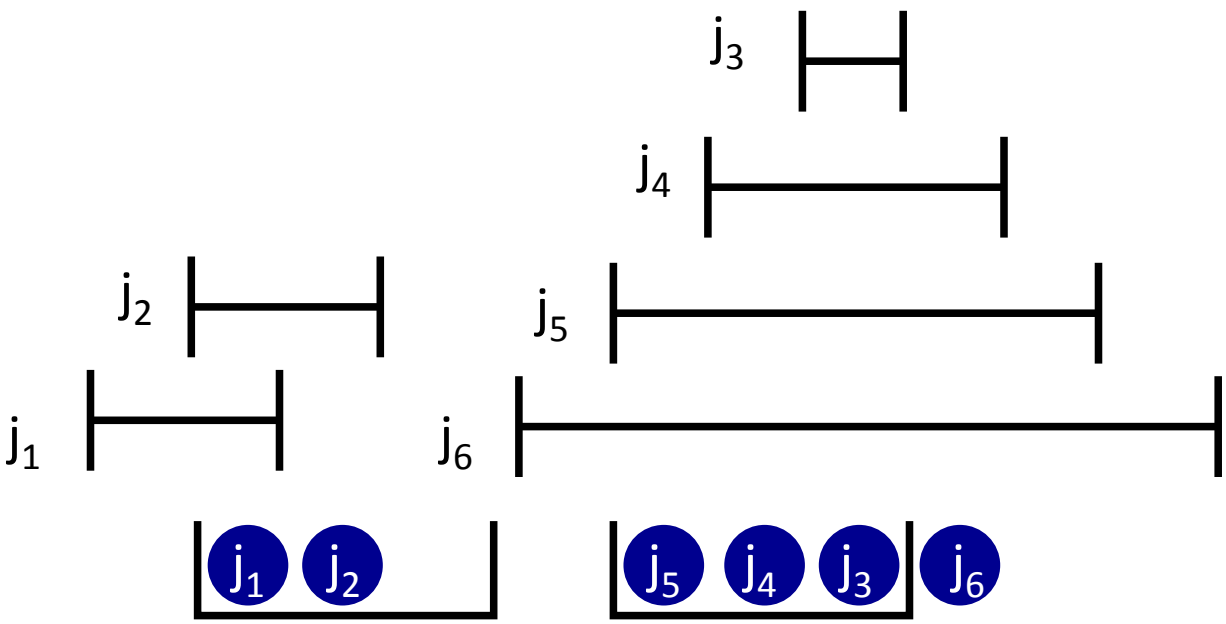

Lazy Binning Example

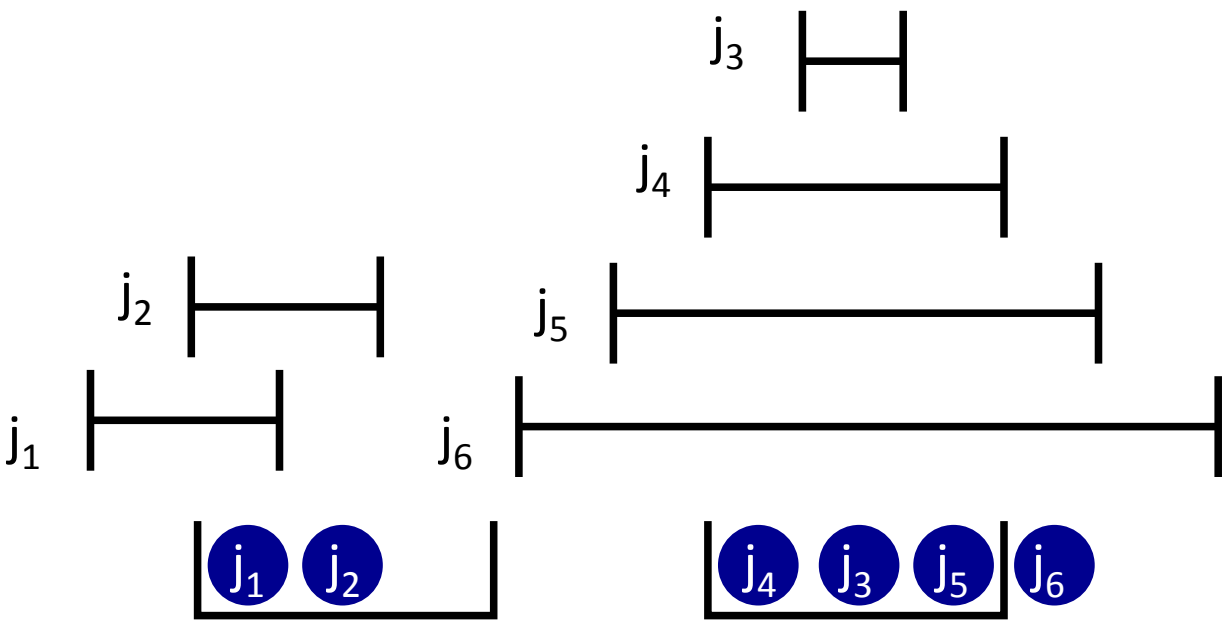

Lazy Binning Example

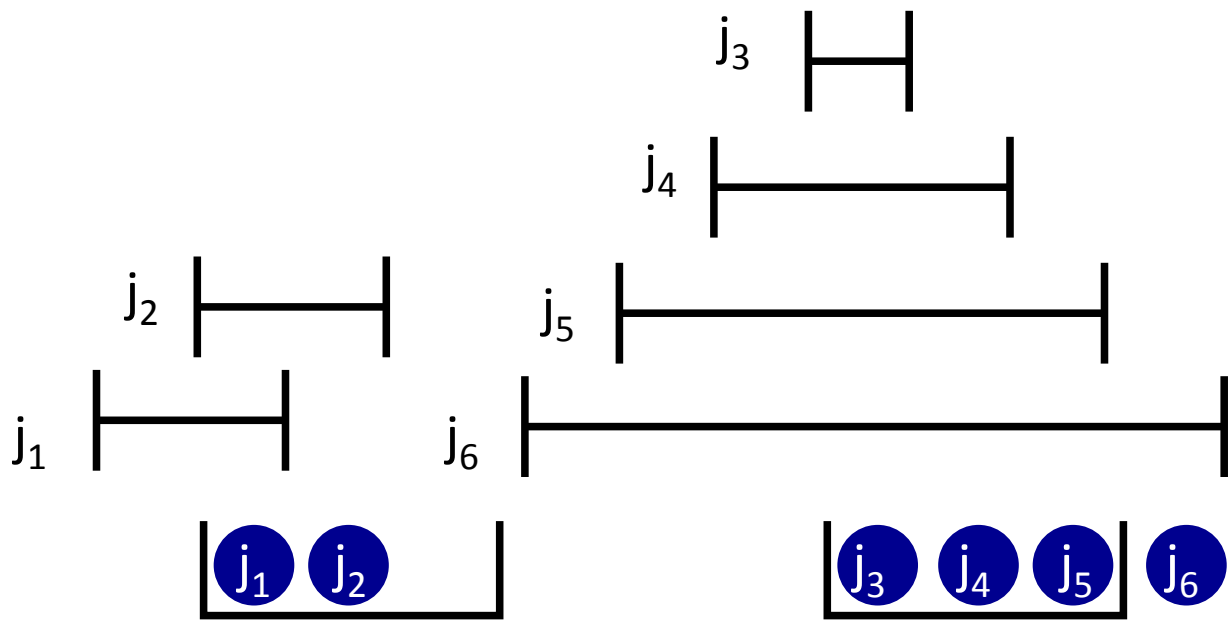

Lazy Binning Example

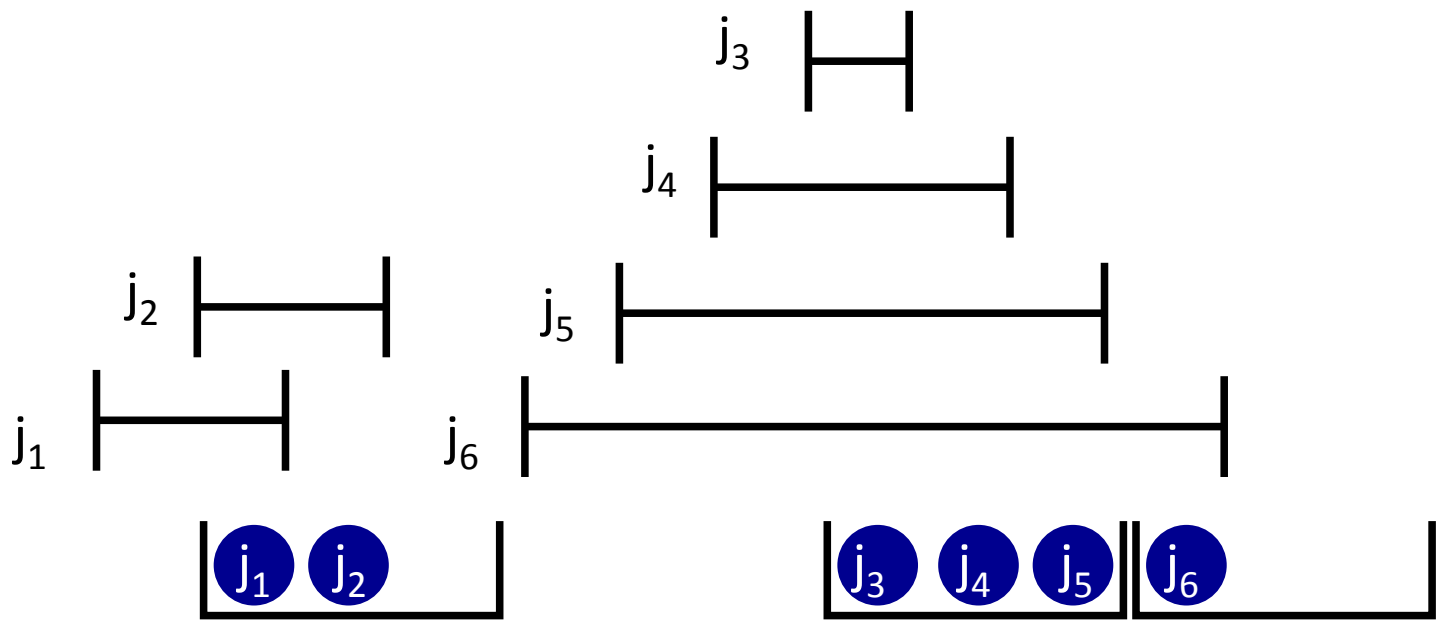

One-Machine Schedules

- If a job set can be feasibly scheduled on one machine, the one-machine lazy-binning schedule is optimal
- Proof hint: Given multi-machine schedule, move an interval onto first without increasing # of intervals
- Active region grows forward and/or backward:

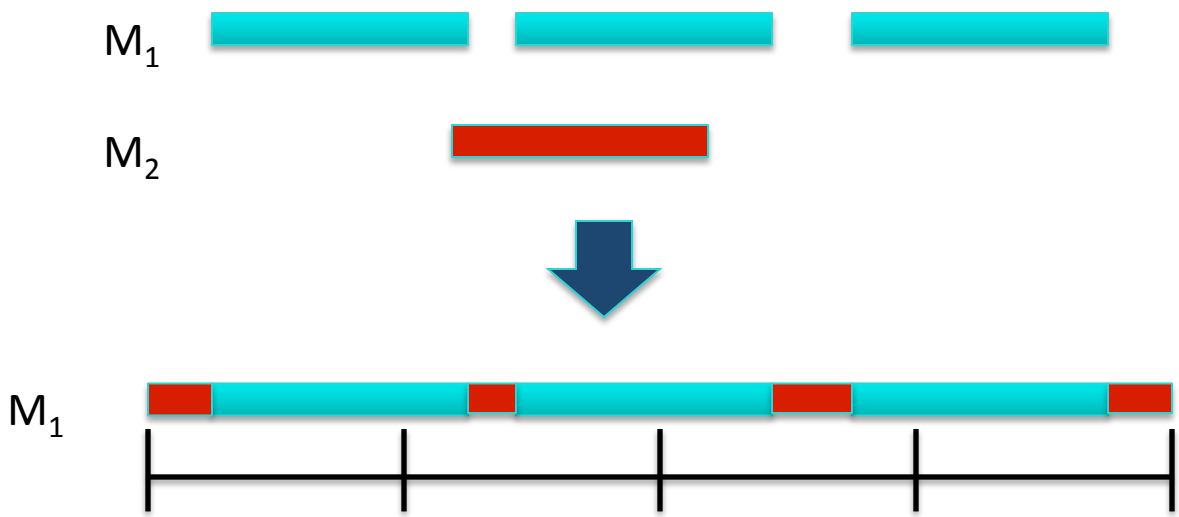

- Add interval at the start, and push (moving others as necessary)

More Machines Can Help Otherwise

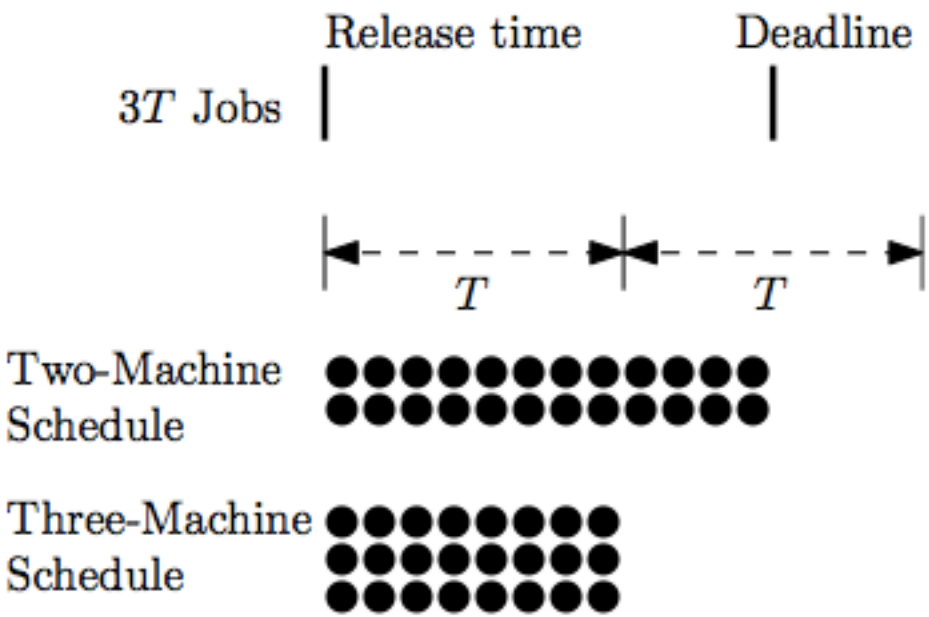

- Feasible on 2 machines, optimal on 3 machines

Multiprocessor Schedule: Round Robin

- Given a set of intervals and P machines
  - Sort intervals by starting time
  - Schedule round robin
- Algorithm doesn't have to assign intervals to processors

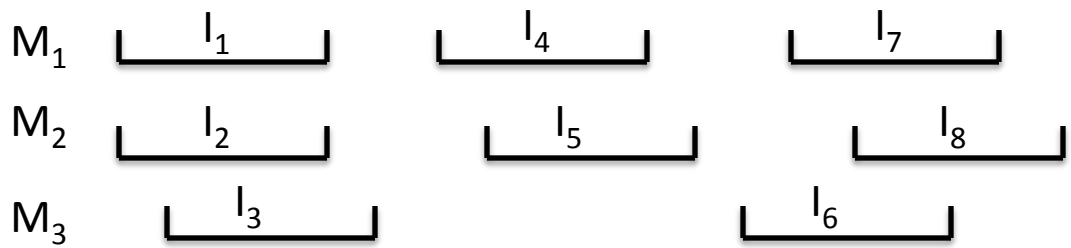

Multiprocessor Partial Schedule Feasibility Check

- EDF on intervals
- EDF with remaining jobs on all permitted slots on processor P
  - After last interval on P
  - No earlier than start of last interval

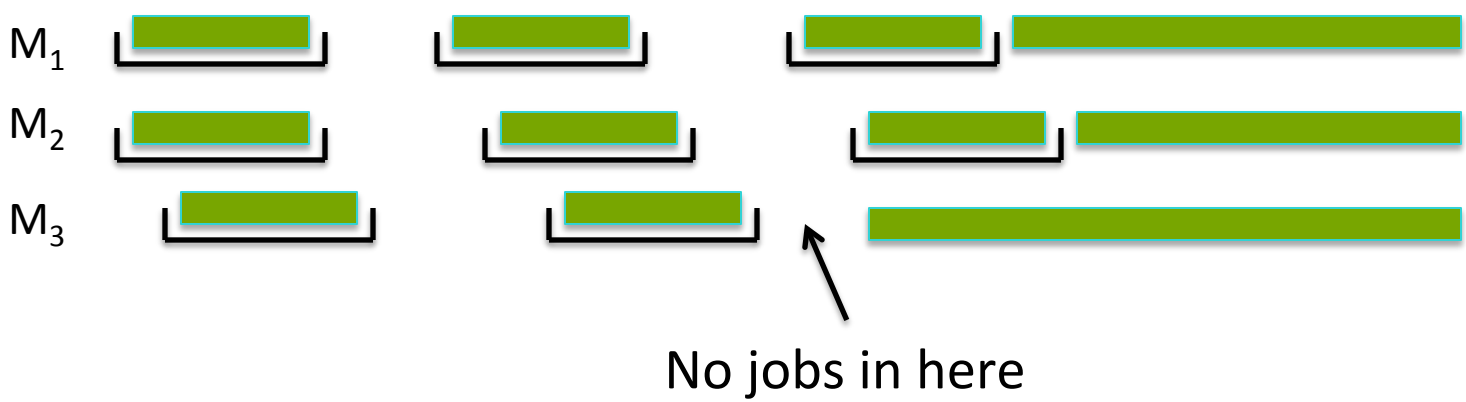

Multiprocessors: Push Case 1

- We don't lose a job
- May or may not gain a job
- Always good!

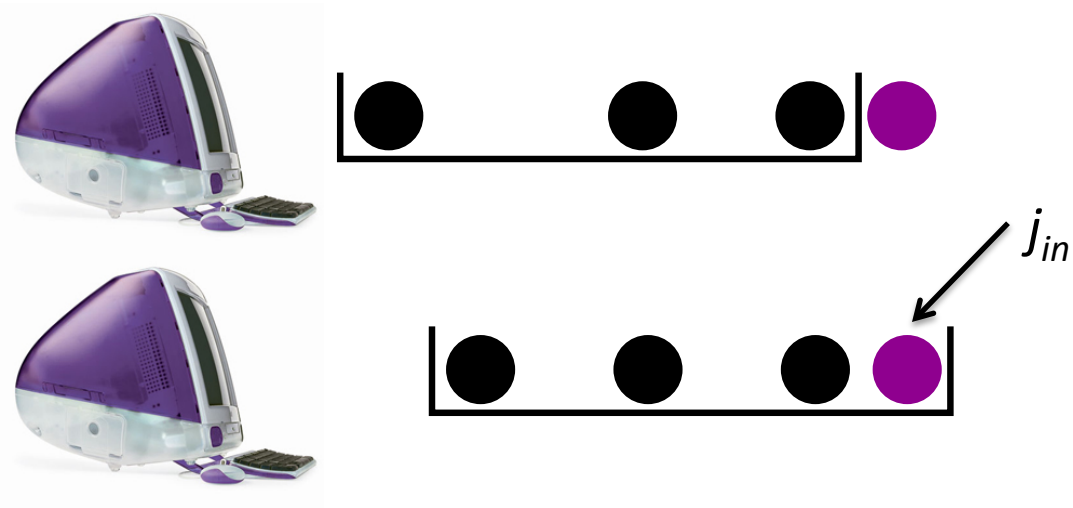

Multiprocessors: Push Case 2

- We lose a job scheduled before push and do not gain a job
  - To be feasible, j_{out} has to be schedulable in a future interval starting t or later
- Only good if we can eventually gain a new job

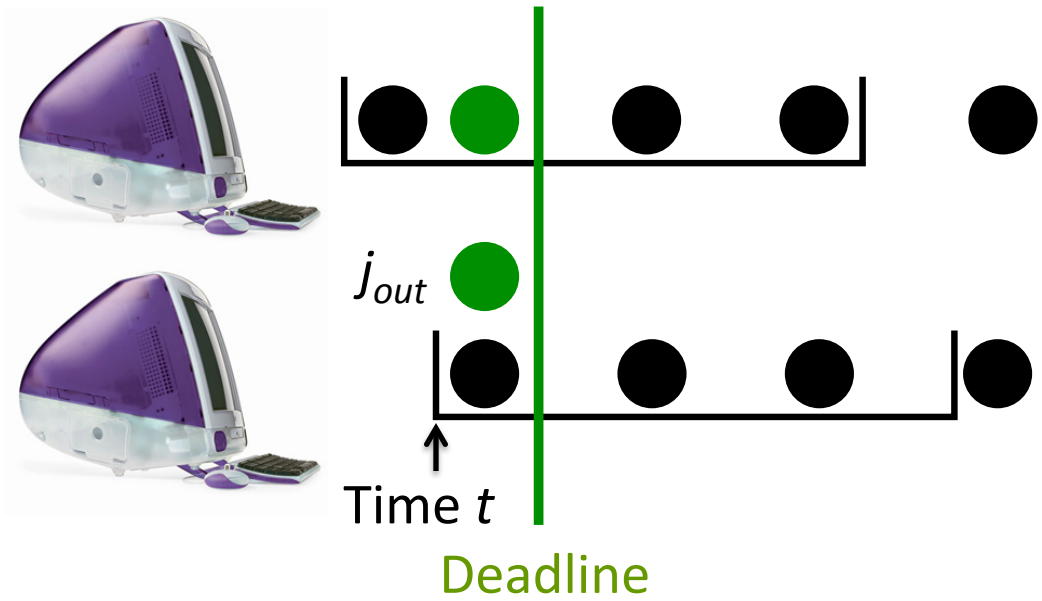

Multiprocessors: Push Case 3

- A pre-push job is replaced (in intervals) by a job earlier in EDF order.
- Always good. The job pushed out is more flexible.

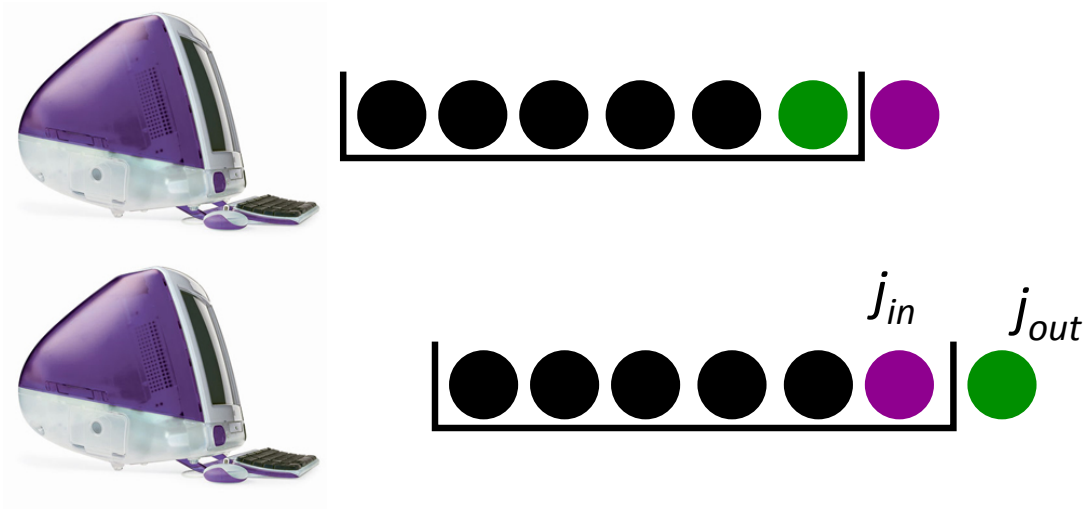

Multiprocessors: Push Case 4

- A job is pushed out as in Case 2. Gain a job later in EDF order
- Sometimes good, sometimes bad. Difficult to characterize.

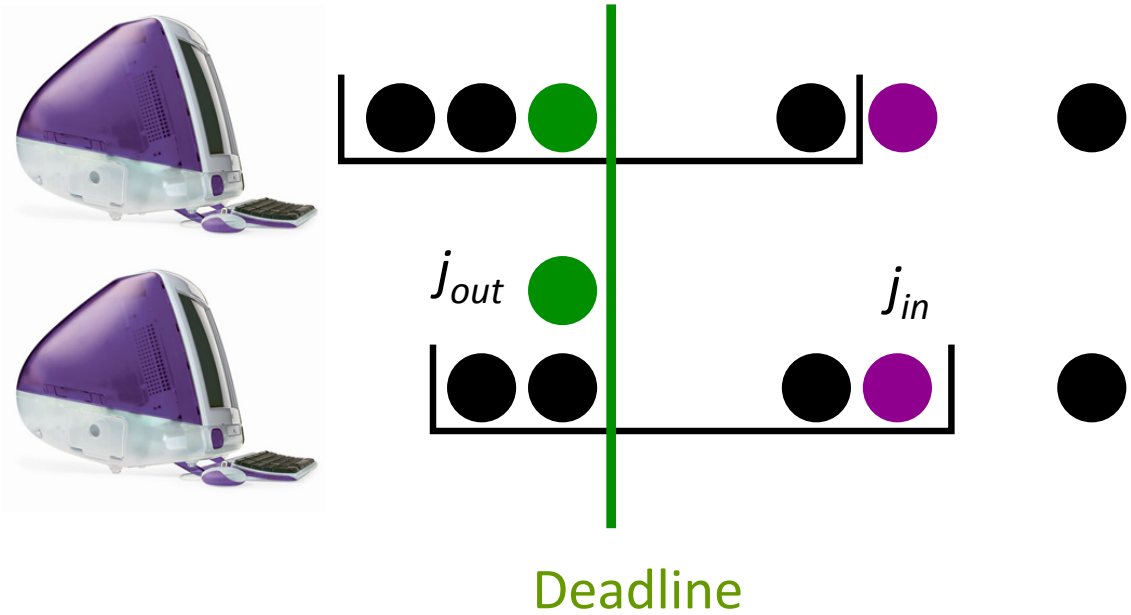

Case 2 and 4 Can Help

- Multiprocessor lazy binning with conservative pushes gives:

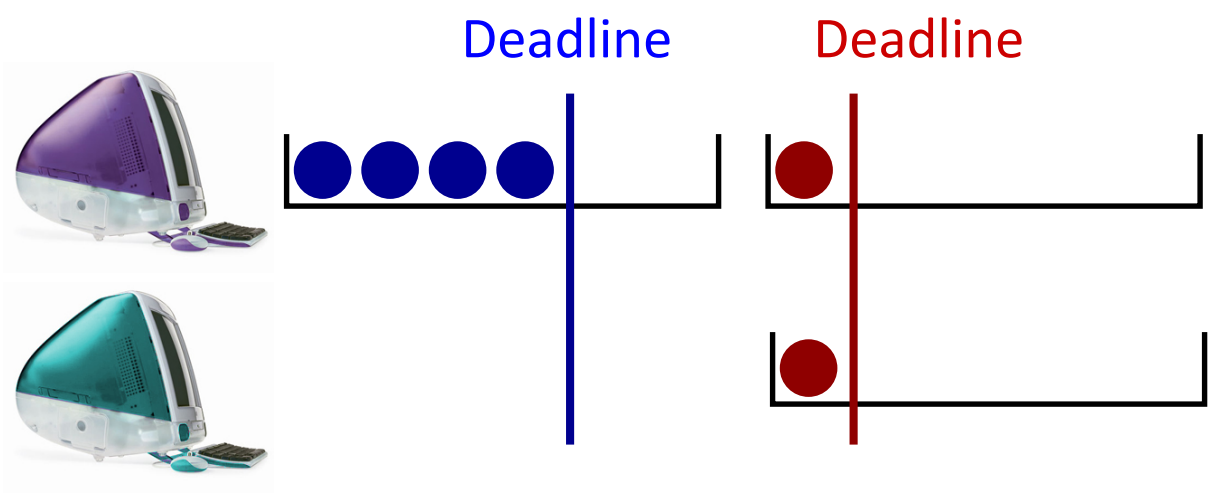

- Next push of first interval is case 2 (j_{out} but no j_{in}).

Case 2 and Case 4 Can Help

- Next push is Case 4 (j_{in} is after j_{out} in EDF order)

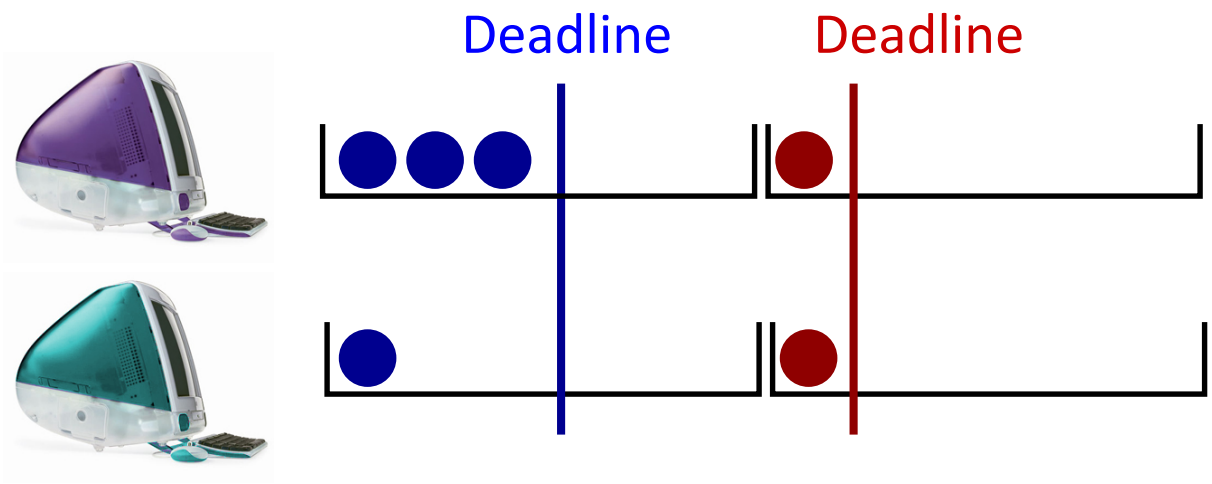

Case 2 and 4 Can Help

- Three calibrations for greedy. Two after "bad" pushes

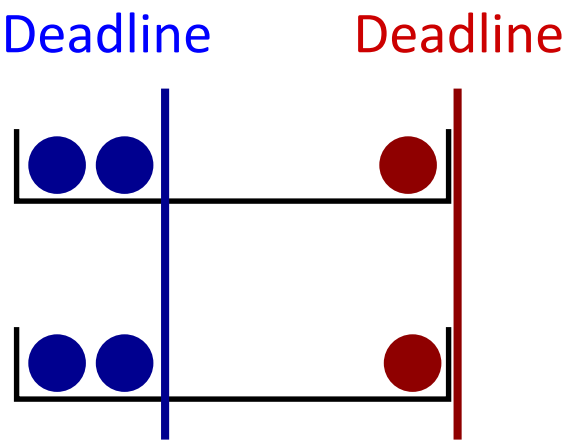

P-Processor Approximation

- Simply, if there is a chance doing “bad” pushes can help, double interval to “cover all options”

Approx Alg

No Pushes

Some Pushes (Opt)

P-processor Approximation Algorithm

- If last interval placed at t (initially 0), put an interval at t
- Move forward till there are at most P intervals at t
- Do all good pushes (Case 1 or 3)
- If further pushing would be (0 or more Case 2)(Case 4) then double the interval size (and pay 2).
  - When doing EDF to characterize push, don't use times after the end of current interval

Approximation Bound

- We add at most one interval per optimal interval: 2-approx
  - Proof hints
    - uses special structure of Case 2 and Case 4 pushes.
    - There's an optimal schedule created by pushes
    - That optimal schedule does all Case-1 and Case-3
    - It may do some Case-2 and Case-4, but never more than T

- If all deadlines are distinct, no Case 4 pushes: optimal.

- One machine version is same as lazy-binning.

Open Problems

- Is this unit-length problem NP-complete? Or polytime algorithm?
- Min average completion time (e.g.) subject to calibration budget
  - Earlier more robust to disruptions
- Heterogeneous machines
- Calibration takes time
- Different job lengths